ADVANCE by signify

LED Driver

Xitanium

XI100C110V143BSY1

Advance Xitanium outdoor LED drivers with SimpleSet technology are designed to give OEMs ultimate flexibility. With the drivers' wide operating windows and simple programming, luminaire manufacturers can design luminaires of different sizes and lumen levels for outdoor applications.

Specifications

Input Voltage (Vac)	Output Power (W)	Output Voltage (V)	Output Current (A)	Efficiency @ Max Load and 75°C Case	Max Case Temp. (°C)	Input Current (A)	Max. Input Power (W)	THD @ Max Load (%)	Power Factor @ Max Load	Surge Protection (Combi-Wave, KV)	Envir. Protection Rating	Dim	Dimming Range (with specified dimmers)	Min. Output Current (A)	Driver Type
120	100	48-143	0.1 - 1.1	89.5	85°C	0.94	114	<10%	>0.95	6	UL damp & dry and Type HL	0-10V Analog Class 1 and 2 Wiring	10% ~ 100%	0.03	Con-stant Cur-rent
277				91.2		0.42									

Enclosure

	In. (mm)	Tolerance (mm)
Overall Length (A1)	6.59 (167.5)	± 0.5mm
Mounting Length (A2)	6.03 (153.2)	± 0.5mm
Case Length (A3)	5.43 (138.0)	± 0.5mm
Case Width (B1)	2.31 (58.8)	± 0.5mm
Mounting Width (B2)	1.69 (42.9)	± 0.5mm
Case Height (C1)	1.48 (37.6)	± 1.0mm
Mounting Hole Diameter (D1)	0.31 (7.9)	± 0.5mm
Mounting Hole Diameter (D2)	0.24 (6.2)	± 0.5mm
Center of SimpleSet Antenna (G1)	2.72(69.0)	± 3.0mm

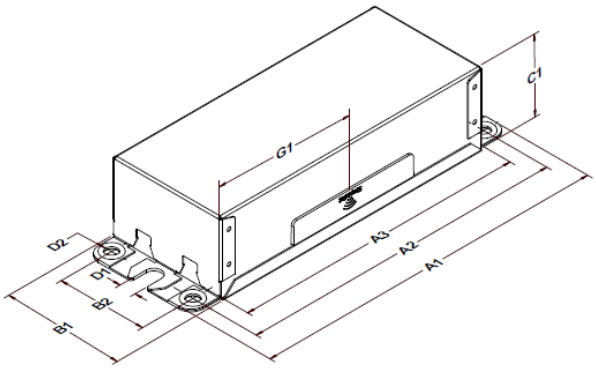

Wiring Diagram

	Wire Length (mm)
Black (Line)	270 (± 30)
White (Neutral)	270 (± 30)
Red (Positive, LED output)	270 (± 30)
Blue (Negative, LED output)	270 (± 30)
Violet (Positive, 0-10V)	270 (± 30)
Pink* (Negative, 0-10V)	270 (± 30)

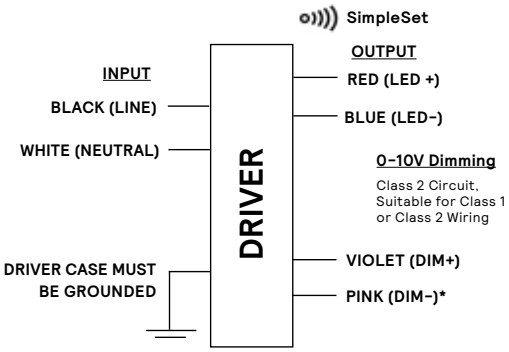

*DIM- will change from GREY to PINK from 2021 onwards.

Warning

- Install in accordance with national and local electrical codes.
- The field-wiring leads or push-in terminals shall be enclosed.

RoHS COMPLIANT c UL us LISTED NOM

Xitanium XI100C110V143BSY1

100W 0.1–1.1A 0–10V with SimpleSet

Features

- 50,000+ hour lifetime[1]
- Programmable output current through SimpleSet
- Large operating window
- 6kV Combi-wave surge rating to comply with ANSI C82.77-5 CAT C low

Benefits

- Enables long life luminaire designs
- Fast and simple way of programming
- Enables fixture designs with wide variety of loads and adjustable current options
- No external surge protection required to pass C82.77-5 CAT C low

Application

- Area
- Roadway
- Parking garages
- Floodlights
- Mid-bay and low-bay fixtures

Electrical Specifications

All the specifications are typical and at 25°C Tcase unless specified otherwise.

Product Data

Order Information	
Full Product Code	XI100C110V143BSY1M (Mid-Pack, 12pcs/Box)
Line Frequency	50/60Hz
Min. Mains Voltage Operational	108 Vac
Max. Mains Voltage Operational	305 Vac
Output Information	
Maximum Open Circuit Voltage	190Vdc
Output Current Ripple (ripple = peak to average / average)	15% max @ max Iout
Output Current Tolerance (In the performance window)	<5%
Protections	Short Circuit, Open Circuit Protection for LED + and LED –, Thermal Foldback
Features	
0–10V Dimming	150µA (±3%) source current from driver. See dim curve for detail
AOC (Adjustable Output Current)	0.1A–1.1A via SimpleSet (Factory Default at 1.05A)
Additional SimpleSet Configurable Features	Adjustable Min Dim level, Adjustable Lumen Output, Adjustable Lumen Output Min, OEM Write Protection
Environment & Approbation	
Operating Ambient Temp. Range	-40°C to +55°C
Max Case Temperature (Tcase)	85°C
Agency Approbations	UL Listed, NOM, cUL, Class P (UL, cUL)
Electromagnetic Compliance	FCC Title 47 Part 15 Class A
Audible Noise	<24dB Class A
Weight	1.44 Lbs / 0.65 kgs

1. Advance Xitanium LED Drivers are manufactured to engineering standards correlating to a designed and average life expectancy of 50,000 hours of operation at maximum rated case temperature. Minimum 90% survivals based on MTBF modeling.

Xitanium XI100C110V143BSY1

100W 0.1–1.1A 0–10V with SimpleSet

Electrical Specifications

All the specifications are typical and at 25°C Tcase unless specified otherwise.

0–10V Dimming Curve

- Dimming source current from the driver: 150µA (@ 0<Vdim<8V)
- Minimum Dim Level: Factory default 10% of Iout (minimum 100mA), can be programmed to a higher level via SimpleSet
- Maximum output voltage on the dimming wires: 12V
- Leakage current of dimming leads: 0.010mA, recommended max number of control circuits in parallel refer to Design-in Guide

Approved Dimmer List

Manufacturer	Manufacturer Part Number
Lutron	Visit www.lutron.com/advance for a list of dimmers (Mark VII) that will work with this driver
Leviton	IllumaTech IP7 series
Advance	Sunrise - SR1200ZTUNV

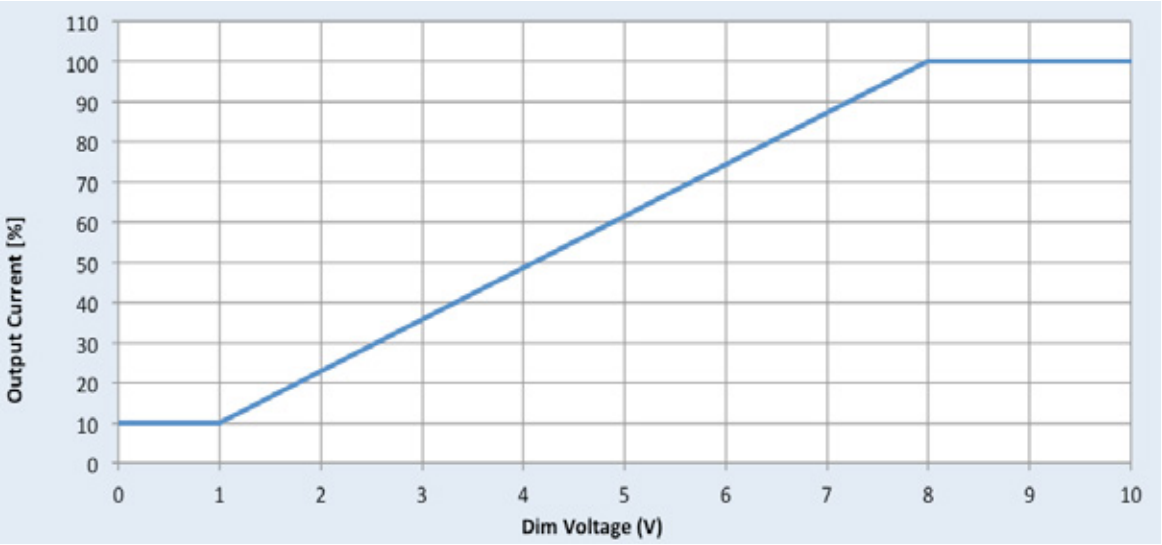

Xitanium XI100C110V143BSY1

100W 0.1–1.1A 0–10V with SimpleSet

Electrical Specifications

All the specifications are typical and at 25°C Tcase unless specified otherwise.

Driver Output Window

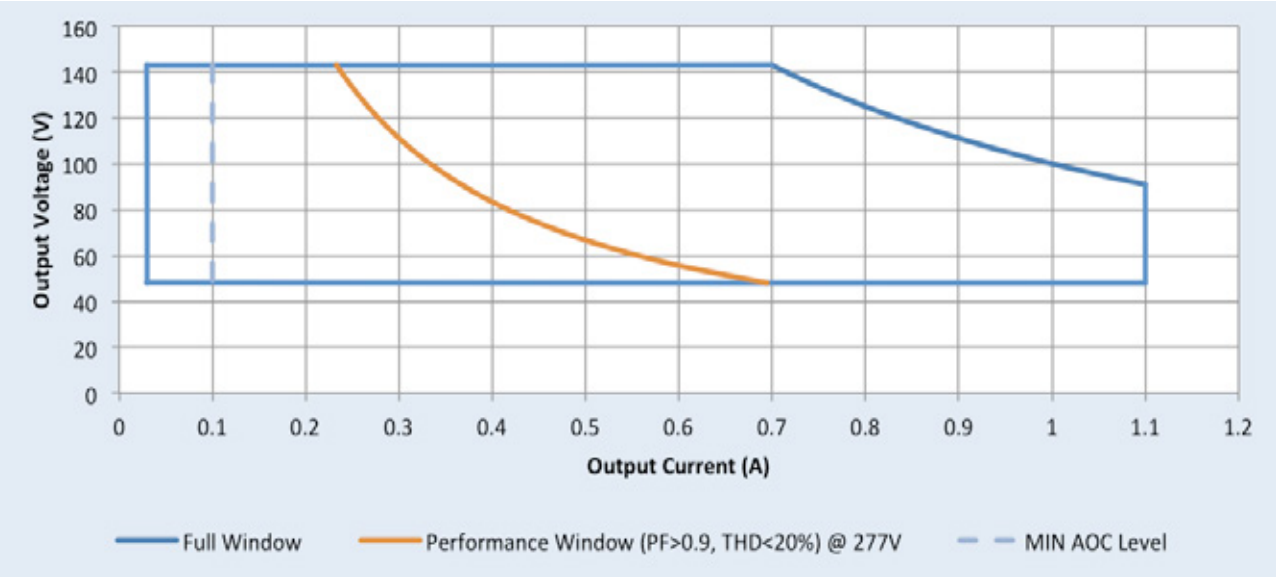

Notes

1. Factory default output current is 1.05A.
2. To get a 100% to 10% dimming range, the output current setting through AOC should be > 0.3A.

Xitanium XI100C110V143BSY1

100W 0.1-1.1A 0-10V with SimpleSet

Electrical Specifications

All the specifications are typical and at 25°C Tcase unless specified otherwise.

Output Current Vs. Driver Case Temperature

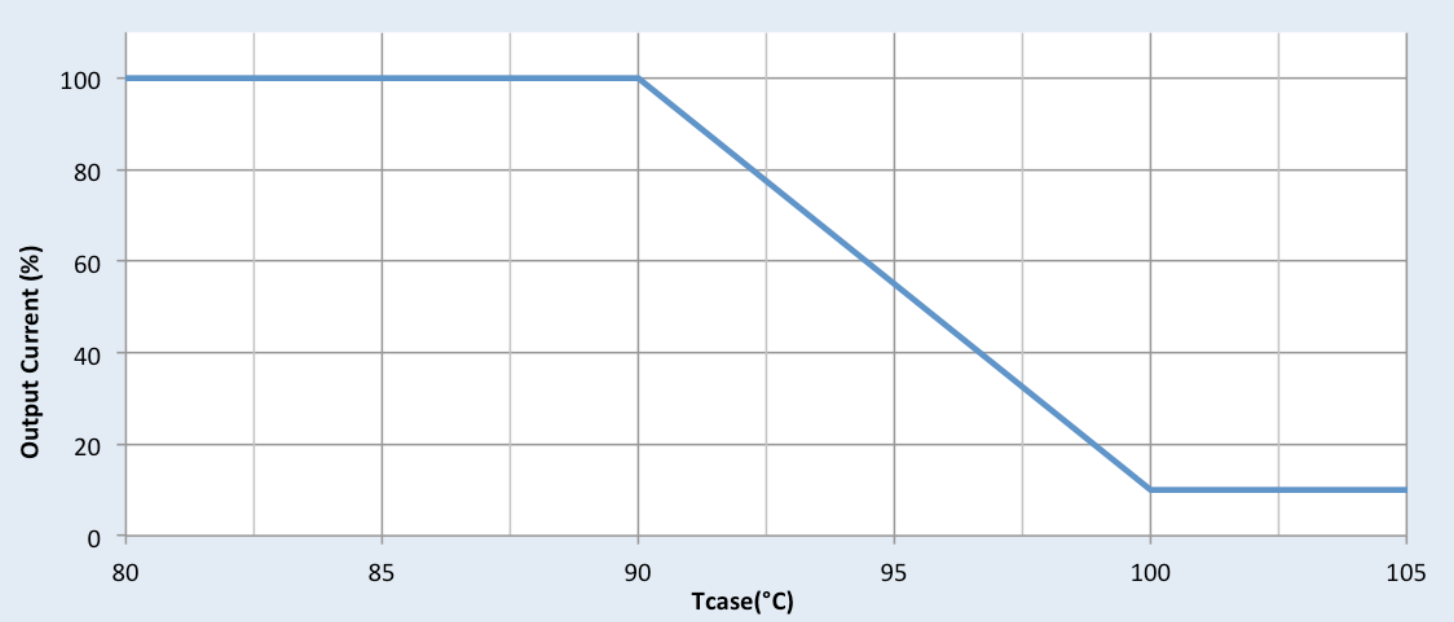

Note

There is ±5°C tolerance on the driver case temperature

Driver Lifetime vs. Driver Case Temperature

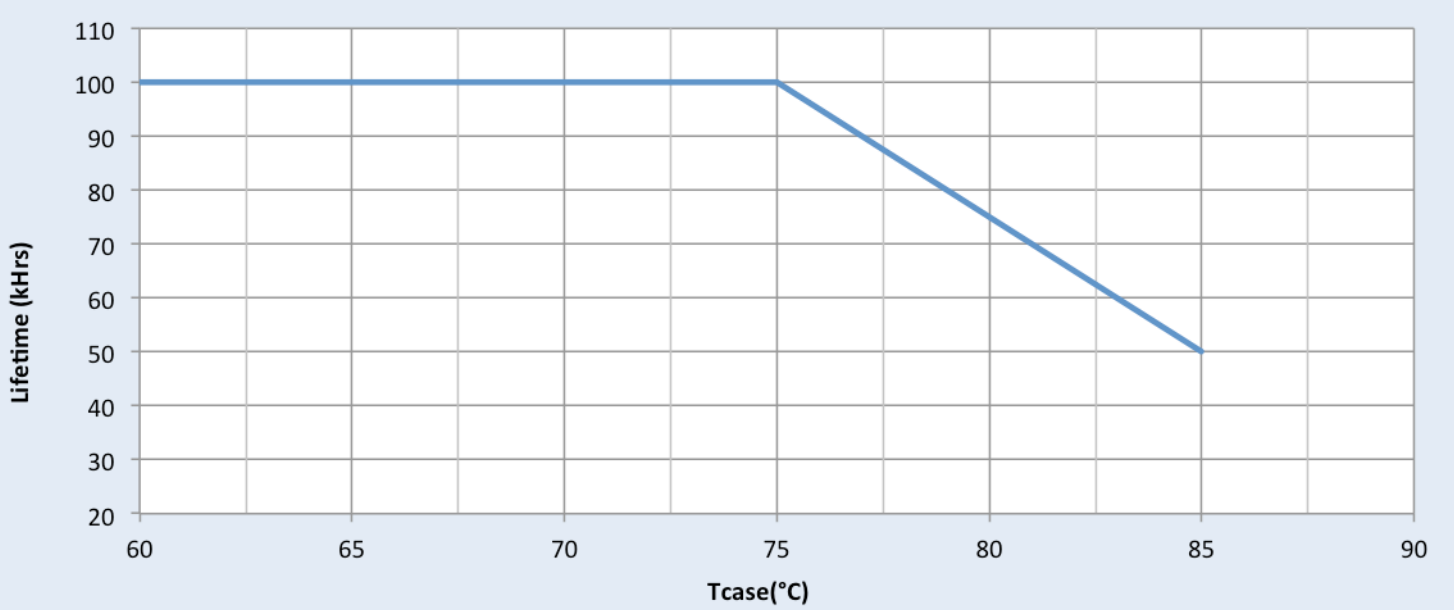

Xitanium XI100C110V143BSY1

100W 0.1-1.1A 0-10V with SimpleSet

Performance Characteristics

Based on measurements on a typical sample at 75°C Case. The accuracy of the measurements is within the tolerance of the measurement instruments.

Efficiency Vs. Output voltage at 120Vac

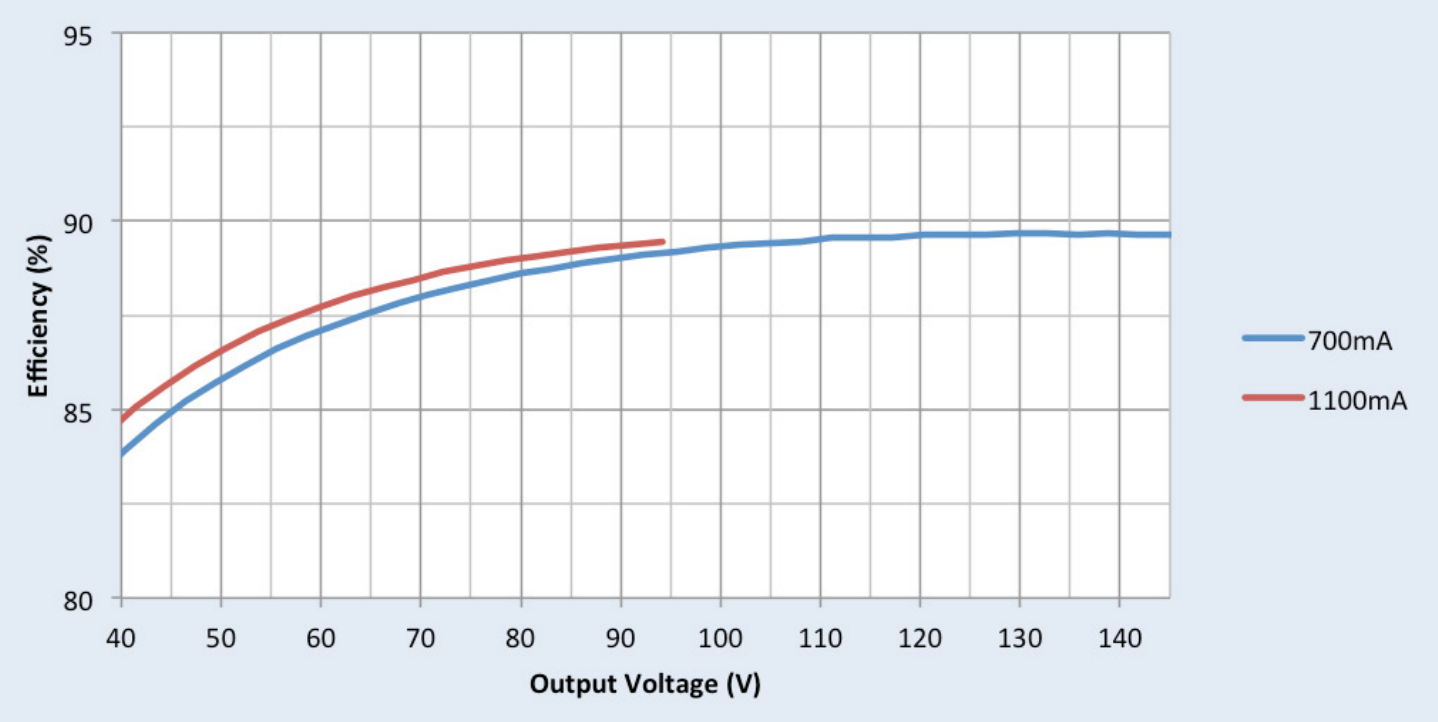

Efficiency Vs. Output Voltage at 277Vac

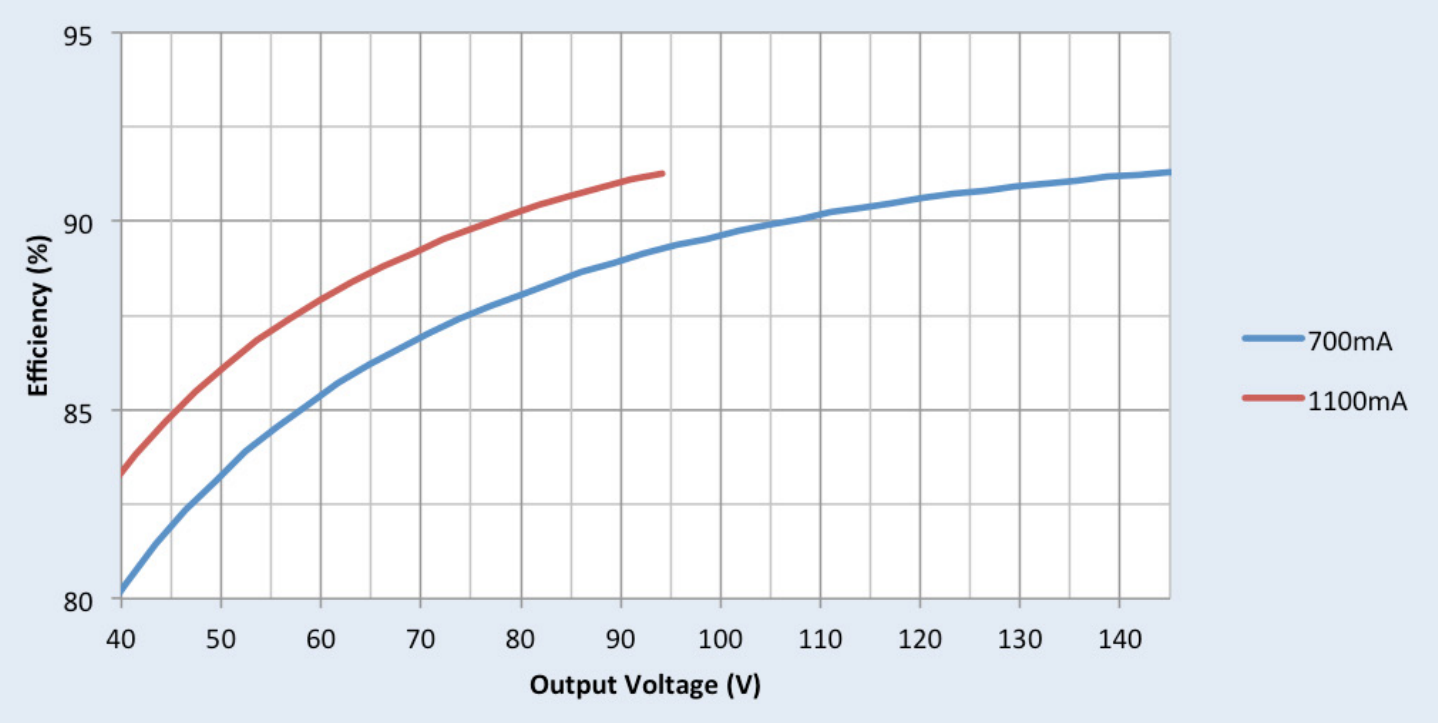

Xitanium XI100C110V143BSY1

100W 0.1-1.1A 0-10V with SimpleSet

Performance Characteristics

Based on measurements on a typical sample at 75°C Case. The accuracy of the measurements is within the tolerance of the measurement instruments.

Power Factor Vs. Output Power

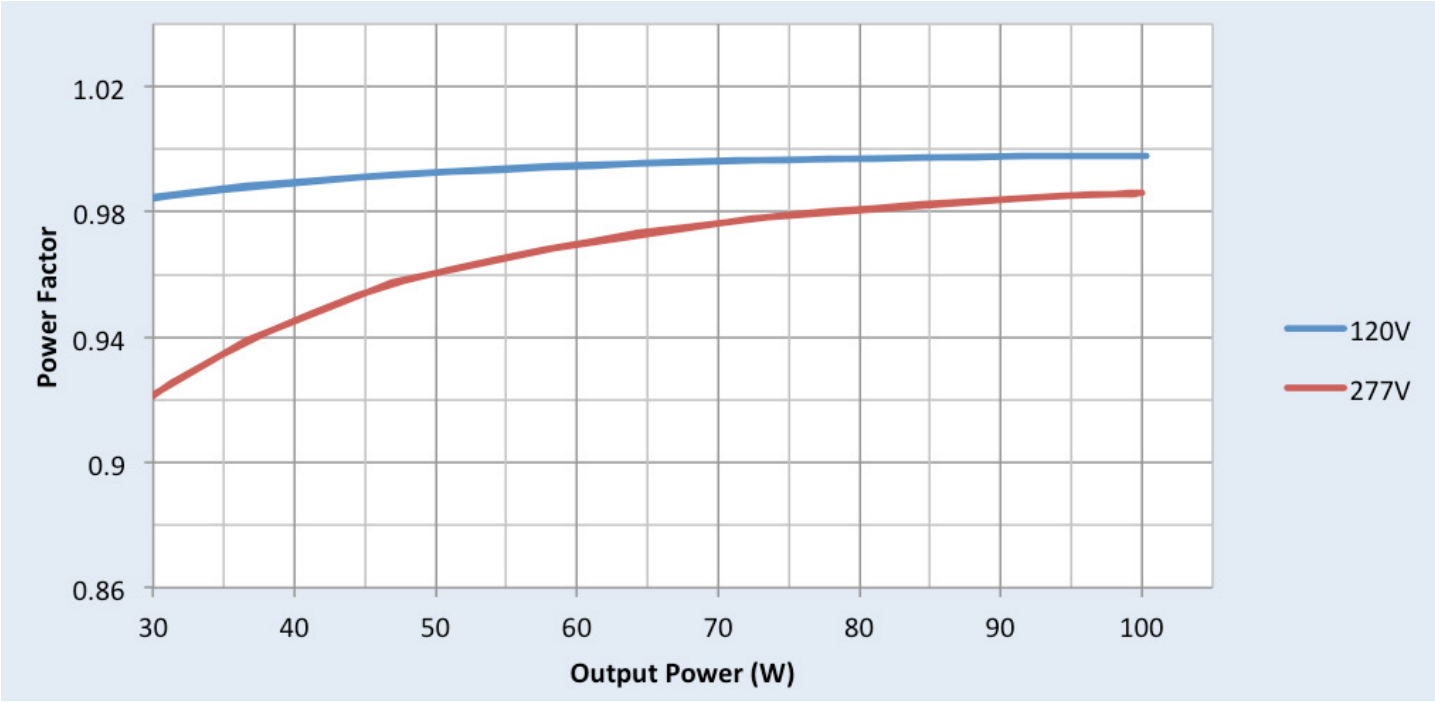

Total Harmonic Distortion (THD) Vs. Output Power

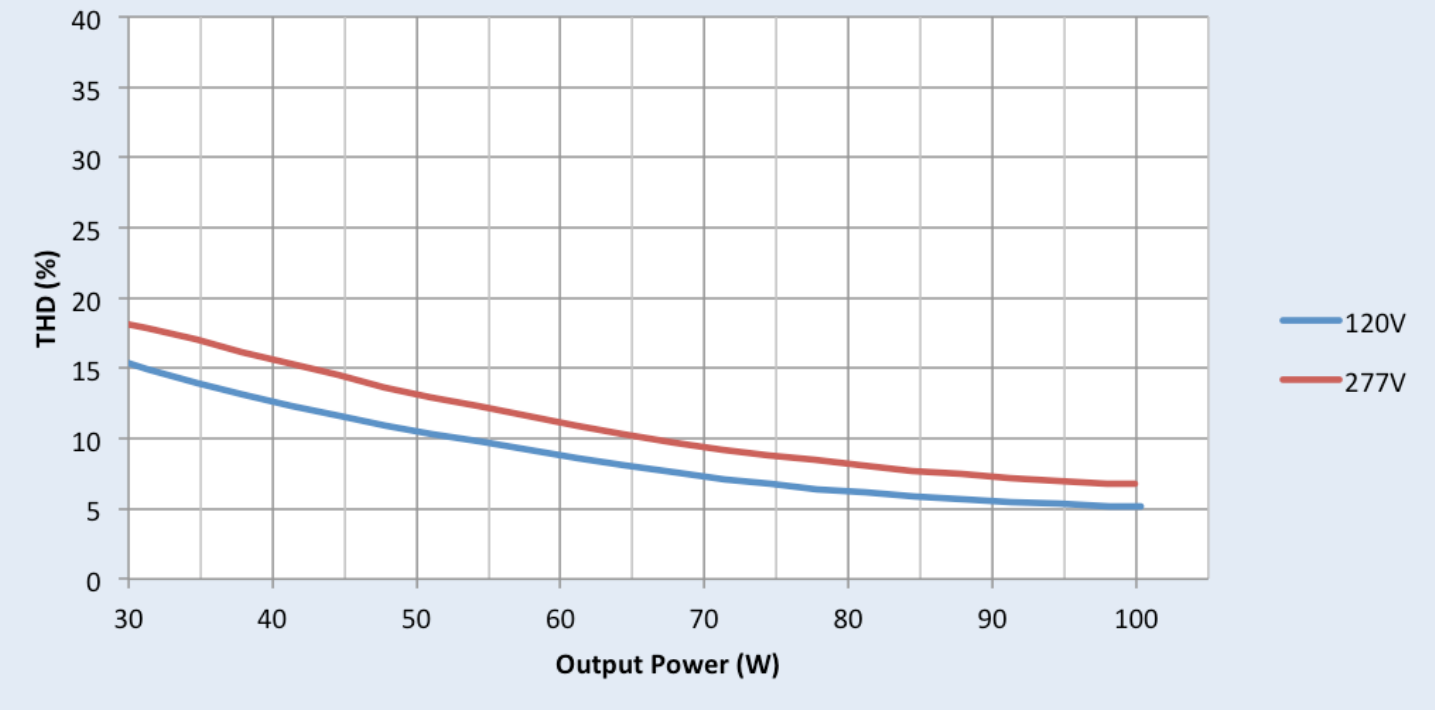

Xitanium XI100C110V143BSY1

100W 0.1-1.1A 0-10V with SimpleSet

Inrush Current Info

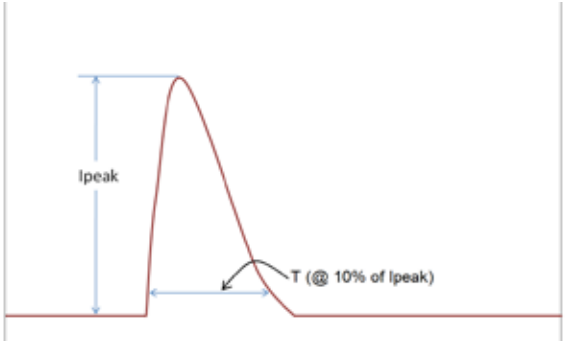

Vin	Ipeak	T (@ 10% of Ipeak)
120 Vrms	57A	166µs
277 Vrms	135A	160µs

Inrush current is measured at peak of the corresponding line voltage. Source impedance per NEMA 410.

Lightning Surge Info

ANSI Surge Type	Differential Mode (L-N)	Common Mode (L-G, N-G, L&N-G)
1.2/50µs Combination Wave (w/t 2Ω)	6kV	6kV

Isolation

Isolation	Input	Output	0-10V	Enclosure
Input	NA	2xU+1kV	2.5kV	2xU+1kV
Output	2xU+1kV	NA	2.5kV	2xU+1kV
0-10V	2.5kV	2.5kV	NA	2.5kV
Enclosure	2xU+1kV	2xU+1kV	2.5kV	NA

U = Max. input voltage

The information presented in this document is not intended as any commercial offer and does not form part of any quotation or contract.

© 2022 Signify Holding. All rights reserved. The information provided herein is subject to change, without notice. Signify does not give any representation or warranty as to the accuracy or completeness of the information included herein and shall not be liable for any action in reliance thereon. The information presented in this document is not intended as any commercial offer and does not form part of any quotation or contract, unless otherwise agreed by Signify.

Signify North America Corporation
400 Crossing Blvd, Suite 600
Bridgewater, NJ 08807
Telephone: 855-486-2216

Signify Canada Ltd.
281 Hillmount Road,
Markham, ON, Canada L6C 2S3
Telephone: 800-668-9008

All trademarks are owned by Signify Holding or their respective owners.