SINCE 1945 KEYSTONE LIGHT MADE EASY™

EXTERNAL DRIVE LED
TYPE C LED TUBES

KT-LED12T5HE-48G-8XX-E /G2
T5 LED LAMP

DESCRIPTION
12W T5 LED Tube | Type C | 3500–5000K | >82 CRI | 0–10V Dimming

Low Optical Flicker Less Than 2% Up to 400 Hz · CLASSIFIED c UL us · DLC LISTED · RoHS Compliant · TRUSTED NB3 WARRANTY · 7 YEAR WARRANTY

LAMP TYPE: Linear
BULB TYPE: T5 LED
BASE TYPE: G5
DIMMING TYPE: 0–10V
WATTAGE: 12W
LAMP INPUT VOLTAGE: 36–45Vdc
COLOR TEMPERATURE: 3500–5000K
COLOR RENDERING INDEX (CRI): >82

PRODUCT FEATURES
- UL Type C LED tubes, powered by Keystone Type C LED drivers
- UL Classified Std. 1598C
- Glass construction with metal end caps
- Operating temperature: –20ºC/–4ºF to 45ºC/113ºF
- THD <15% at full driver load
- PF >0.90 at full driver load
- 0–10V dimmable
- 70,000+ hours lifetime
- Keystone tube and driver pairing wires either single-ended or double-ended. See wiring diagrams for details and common ballast retrofit scenarios
- Low optical flicker

LAMP SPECIFICATIONS

		Driver: KTLD-2LT5HE-UV-12C-VDIM /G2						Driver: KTLD-4LT5HE-UV-12C-VDIM /G2						
		1 Lamp			2 Lamps			3 Lamps			4 Lamps			
Catalog Number	Color Temp.	Nominal Input Power	Nominal Lumens	Nominal Efficacy	Nominal Input Power	Nominal Lumens	Nominal Efficacy	Nominal Input Power	Nominal Lumens	Nominal Efficacy	Nominal Input Power	Nominal Lumens	Nominal Efficacy	Power Factor
KT-LED12T5HE-48G-835-E /G2	3500K	13W	1700 lm	130 lm/W	26W	3400 lm	130 lm/W	39W	5100 lm	130 lm/W	52W	6800 lm	130 lm/W	>0.9
KT-LED12T5HE-48G-840-E /G2	4000K	13W	1750 lm	134 lm/W	26W	3500 lm	134 lm/W	39W	5200 lm	134 lm/W	52W	6900 lm	134 lm/W	>0.9
KT-LED12T5HE-48G-850-E /G2	5000K	13W	1800 lm	138 lm/W	26W	3600 lm	138 lm/W	39W	5400 lm	138 lm/W	52W	7200 lm	138 lm/W	>0.9

SPECTRAL DISTRIBUTION

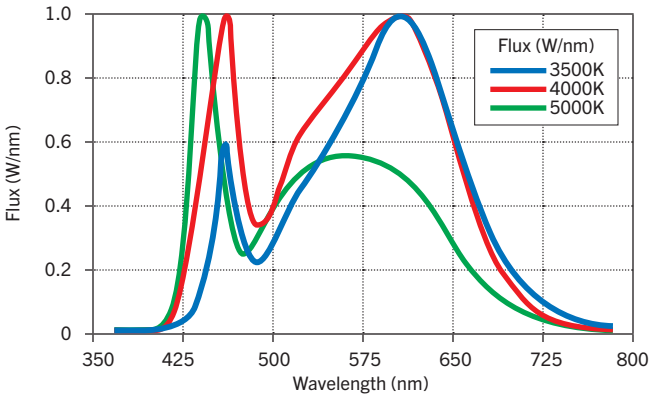

RATED LIFE

L70 (Hours)	70,000

BEAM ANGLE: 240º

VISIBLE LIGHT AREA: 325º

KEYSTONE SINCE 1945 LIGHT MADE EASY™

EXTERNAL DRIVE LED
TYPE C LED TUBES

KT-LED12T5HE-48G-8XX-E /G2

T5 LED LAMP

DRIVER SPECIFICATIONS

Catalog Number	Description	Dimensions
KTLD-2LT5HE-UV-12C-VDIM /G2	Driver for (2) 4' T5 Type C lamps; 120–277V input, 0–10V dimming; 270mA output current	1.10" × 1.33" × 9.50"
KTLD-4LT5HE-UV-12C-VDIM /G2	Driver for (4) 4' T5 Type C lamps; 120–277V input, 0–10V dimming; 270mA output current	1.30" × 1.80" × 9.60"

PHYSICAL SPECIFICATIONS

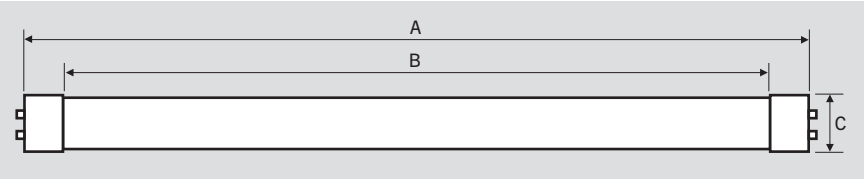

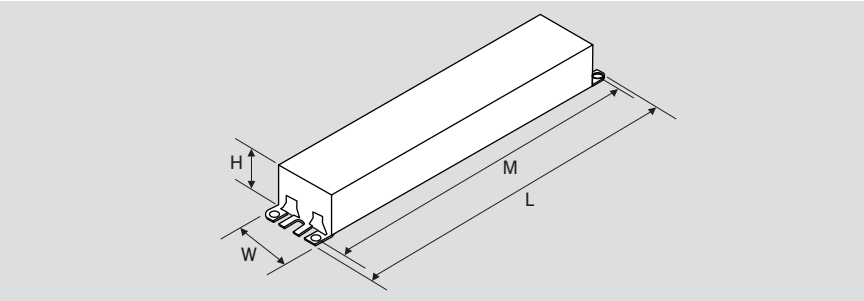

LAMP DIMENSIONS

A (Body Length)	45.19"
B (Illuminated Length)	44.00"
C (Diameter)	0.63"

NOMINAL LENGTH: 48"
BASE TYPE: G5

DRIVER DIMENSIONS

KTLD-2LT5HE-UV-12C-VDIM /G2		KTLD-4LT5HE-UV-12C-VDIM /G2	
L (Length)	9.50"	L (Length)	9.60"
W (Width)	1.33"	W (Width)	1.80"
H (Height)	1.10"	H (Height)	1.30"
M (Mounting)	8.90"	M (Mounting)	8.90"

WIRING INSTRUCTIONS

1. Shut off power.
2. Remove existing fluorescent tube(s) and diffuser (if applicable).
3. Open ballast compartment cover, cut all wires (as shown below), and remove existing ballast. Disconnect starter (if applicable).

TYPICAL BALLAST CONFIGURATIONS

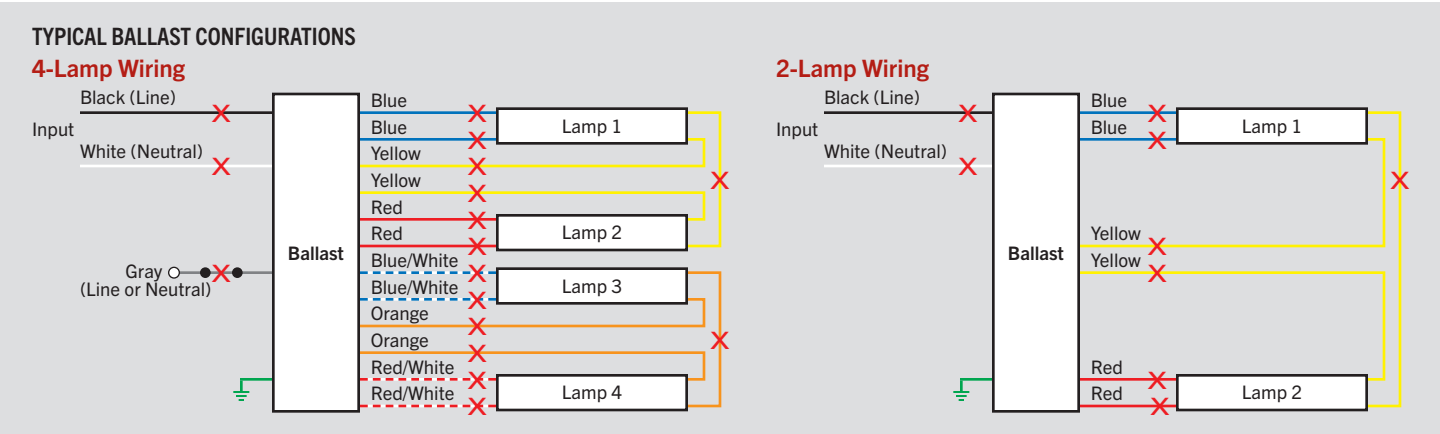

(continued on page 3)

KEYSTONE SINCE 1945 LIGHT MADE EASY™

EXTERNAL DRIVE LED TYPE C LED TUBES

KT-LED12T5HE-48G-8XX-E /G2

T5 LED LAMP

WIRING INSTRUCTIONS *(continued)*

4. Check the mounting holes of ballast to see whether they are suitable to install LED driver. If not, drill new holes for mounting. Install LED driver to luminaire using screws.
5. Wire according to diagrams (as shown below). ***Note:*** **Do not leave any loose wires exposed.**

RETROFIT WIRING

4-Lamp Wiring Configuration

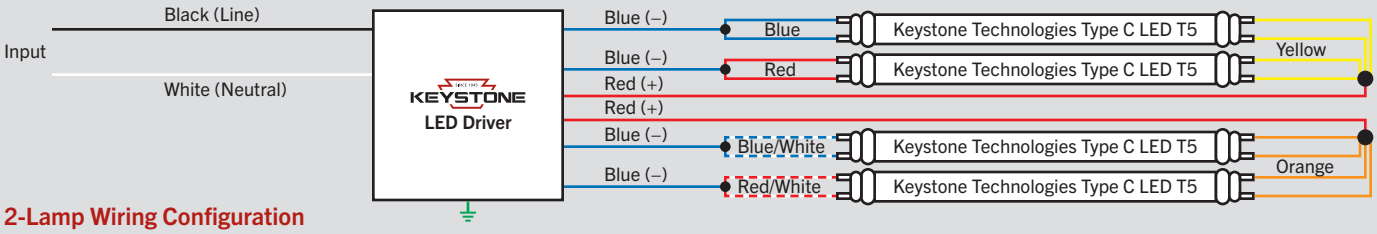

2-Lamp Wiring Configuration

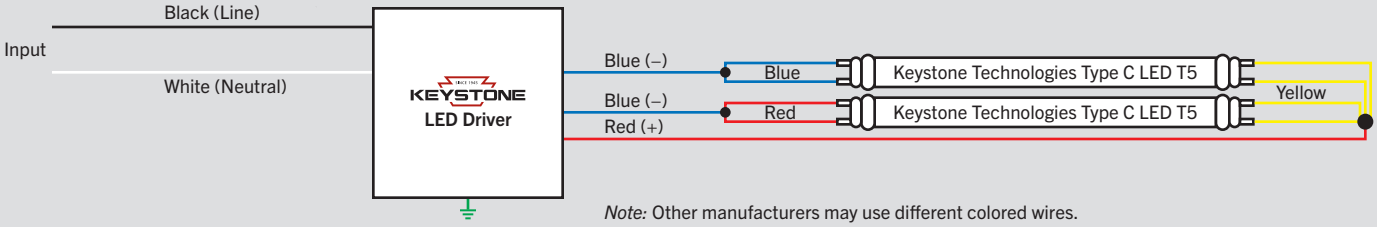

Note: Other manufacturers may use different colored wires.

NEW INSTALLATION: DOUBLE-ENDED WIRING

4-Lamp Wiring Configuration

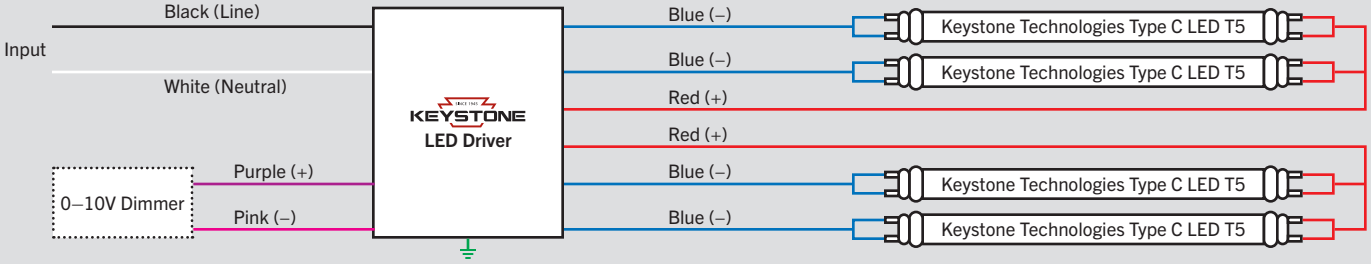

2-Lamp Wiring Configuration

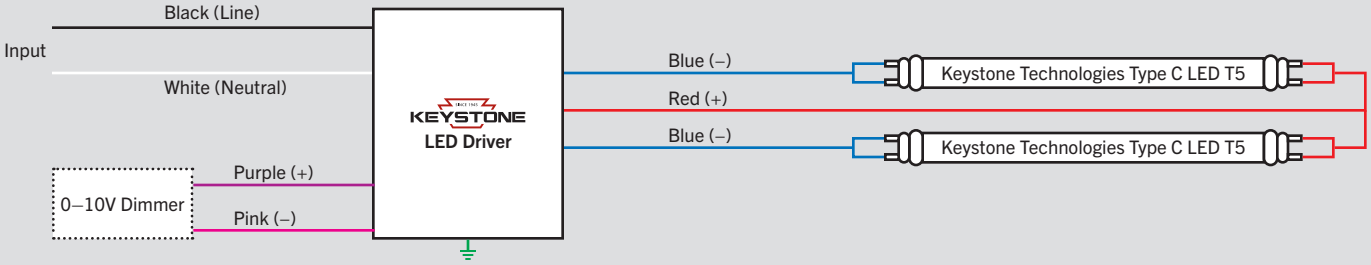

(continued on page 4)

KEYSTONE SINCE 1945 LIGHT MADE EASY™

EXTERNAL DRIVE LED
TYPE C LED TUBES

KT-LED12T5HE-48G-8XX-E /G2

T5 LED LAMP

WIRING INSTRUCTIONS *(continued)*

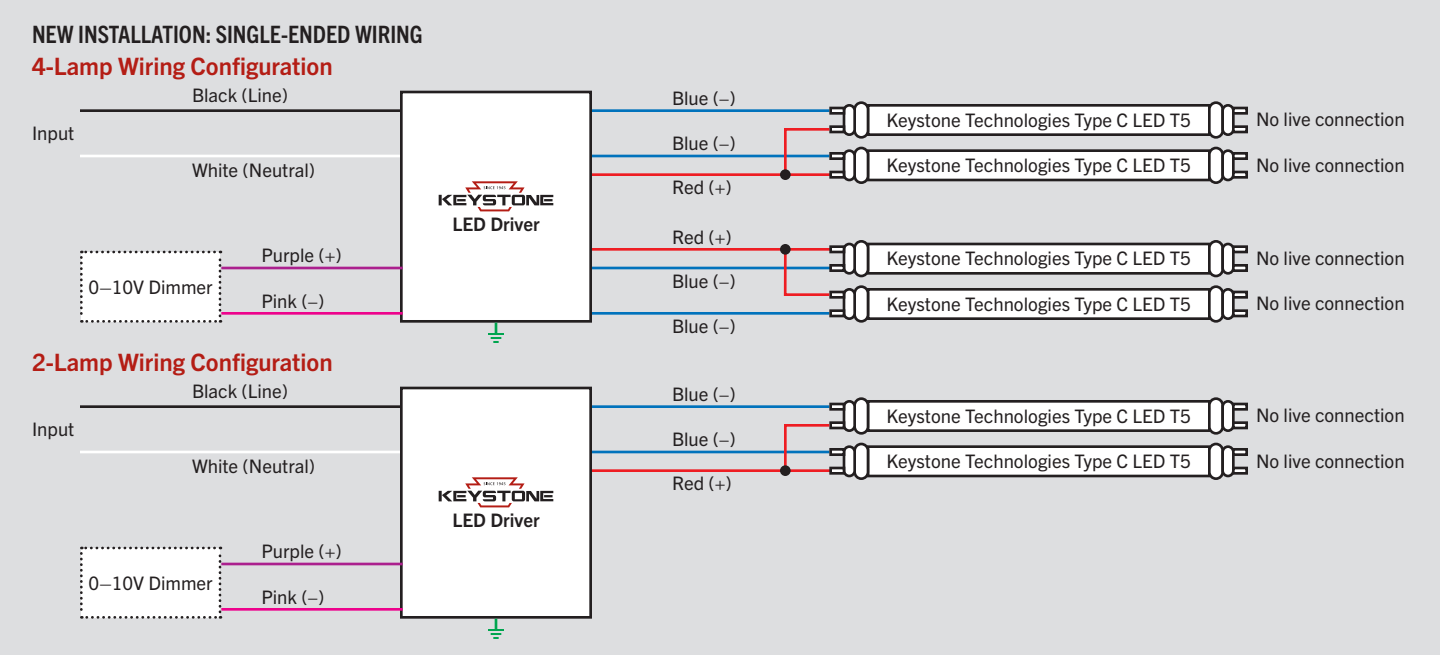

Note: In accordance with NEC-20 410.69 2022, all 0-10V negative wires have been updated from gray to pink, Please contact Keystone for details.

6. Close compartment cover and make sure live parts are not accessible. Affix field-applied label in a visible section inside the luminaire.
7. Install the LED tubes and cover the diffuser (if applicable).
8. Turn on power and verify that the tubes are working correctly. **If not, immediately turn off power and contact Keystone Technologies.**

ORDERING INFORMATION

ORDER CODE	PACK QTY.	EASY CODE	UPC	DLC PRODUCT ID
KT-LED12T5HE-48G-835-E /G2	25	NWV-15	843654141183	PW53ABQ0
				PYDQIIFE
KT-LED12T5HE-48G-840-E /G2	25	WKQ-40	843654141190	PV6PRBCX
				PXKLF0S5
KT-LED12T5HE-48G-850-E /G2	25	VSX-95	843654141206	PE5L288Y
				P9OBU4YY

CATALOG NUMBER BREAKDOWN

KT-LED12T5HE-48G-8XX-E /G2

1 2 3 4 5 6 7 8 9 10

1 **Keystone Technologies**
2 **LED Lamp**
3 **Wattage**
4 **Lamp Type**
5 **Nominal Length (Inches)**
6 **Glass Construction**
7 **80 CRI**
8 **Color Temperature**
9 **External Drive Series**
10 **Generation 2**